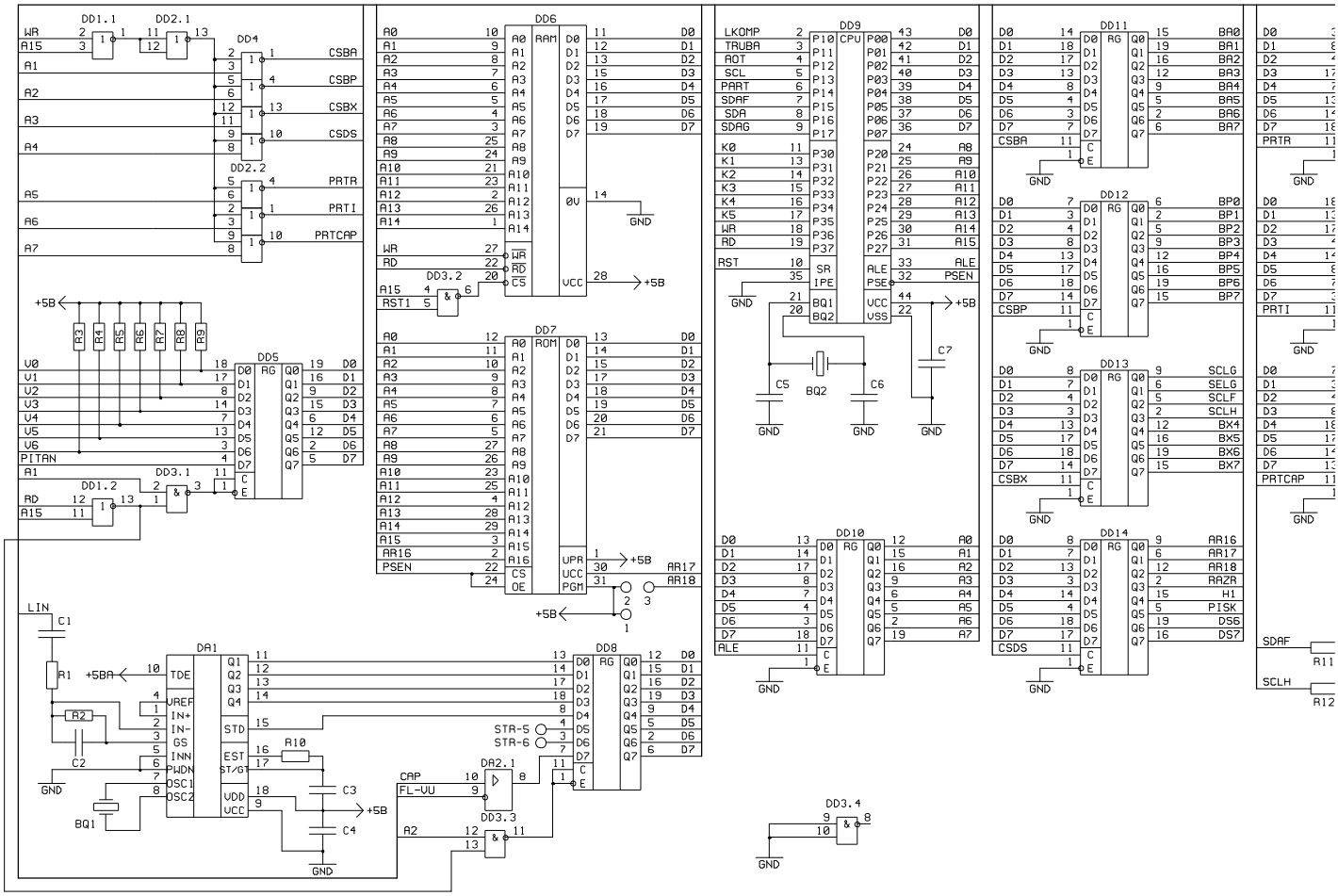
DD1.1
DD2.1
DD4
DD2.2
DD6
DD7
DD9
DD11
DD12
DD13
DD14
DD10
DD5
DD1.2
DD3.1
DD3.2
DA1
DD8
DA2.1
DD3.3
DD3.4
CSBA
CSBP
CSBX
CSDS
PRTR
PRTI
PRTCAP
+5В
GND
LIN
C1
R1
R2
C2
BQ1
C3
C4
R10
STR-5
STR-6
CAP
FL-VU
A2
RST1
PSEN
AR17
AR18
LKOMP
TRUBA
AOT
SCL
PART
SDAF
SDA
SDAG
RST
ALE
BQ2
C5
C6
C7
SCLG
SELG
SCLF
SCLH
BX4
BX5
BX6
BX7
AR16
AR17
AR18
RAZR
H1
PISK
DS6
DS7
BP0
BP1
BP2
BP3
BP4
BP5
BP6
BP7
PRTCAP
SDAF
SCLH

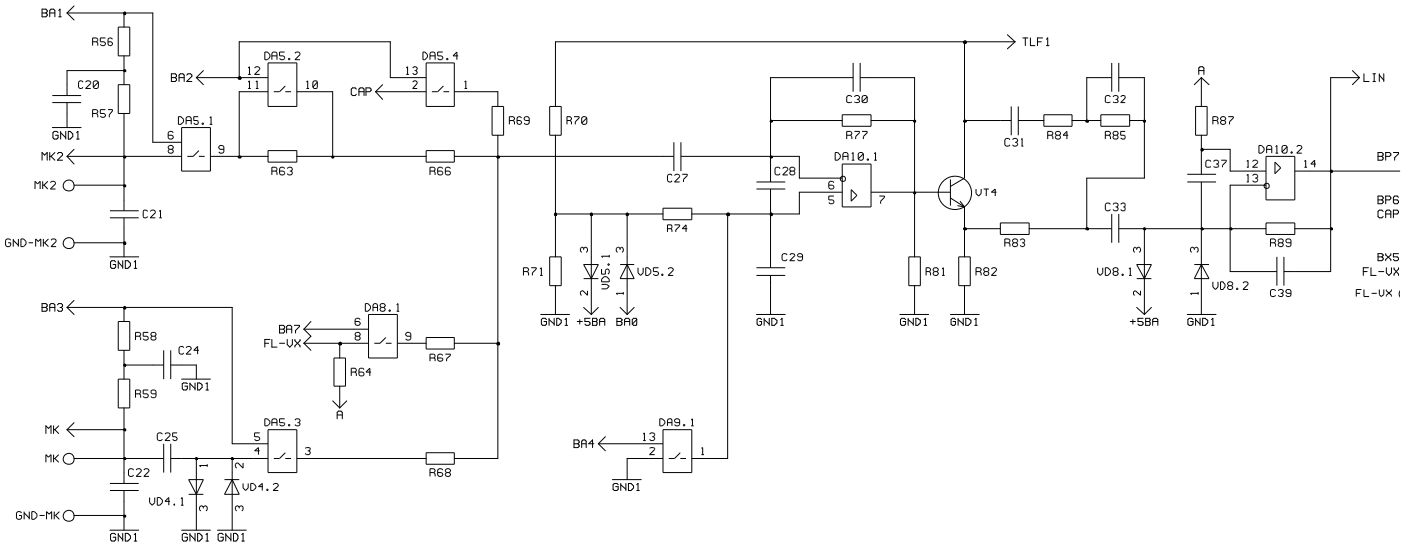
BA1
R56
C20
R57
GND1
MK2
C21
GND-MK2
BA2
DA5.2
DA5.1
R63
CAP
DA5.4
R66
R69
R70
TLF1
C27
C28
C29
C30
R77
DA10.1
R74
R71
VD5.1
VD5.2
+5BA
BA0
R81
R82
VT4
C31
R84
C32
R85
R83
C33
VD8.1
VD8.2
R87
C37
DA10.2
R89
C39
LIN
BP7
BP6
CAP
BX5
FL-VX
BA3
R58
C24
R59
MK
C25
C22
VD4.1
VD4.2
GND-MK
DA8.1
BA7
FL-VX
R64
R67
DA5.3
R68
BA4
DA9.1

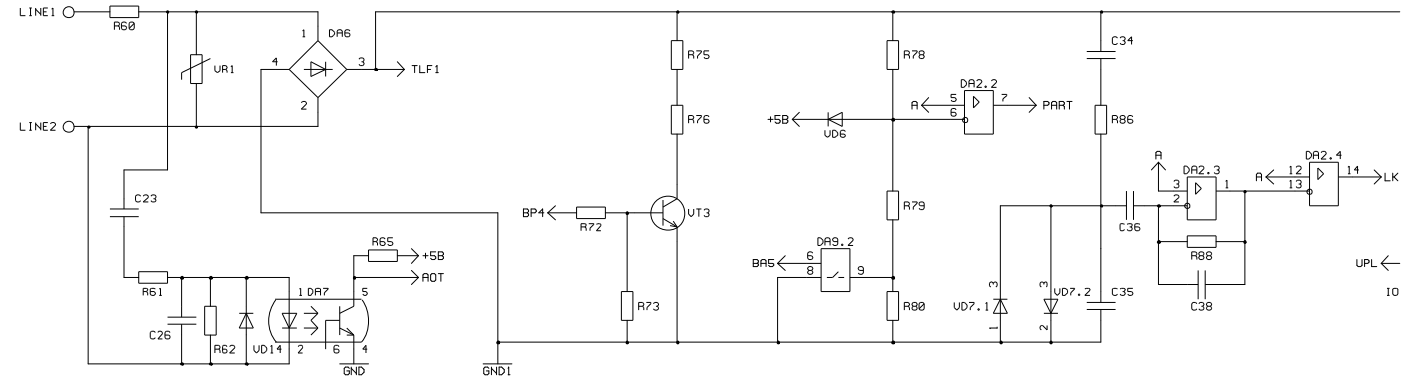
LINE1
R60
VR1
DA6
TLF1
LINE2
C23
R61
C26
R62
VD14
DA7
R65
+5В
AOT
GND
GND1
R75
R76
BP4
R72
VT3
R73
R78
+5В
VD6
DA2.2
PART
R79
BA5
DA9.2
R80
VD7.1
VD7.2
C35
C34
R86
C36
DA2.3
R88
C38
DA2.4
LK
UPL
IO

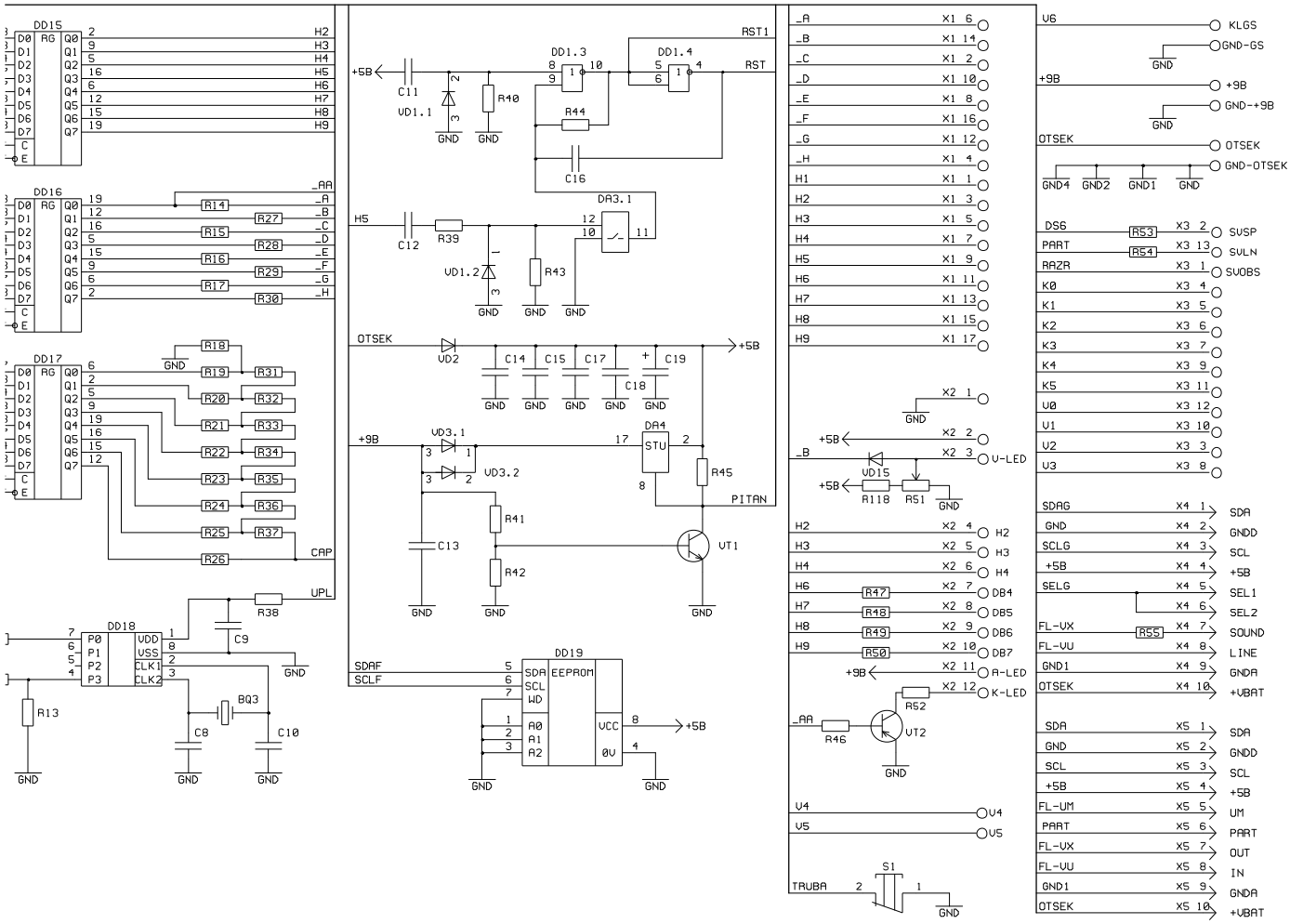

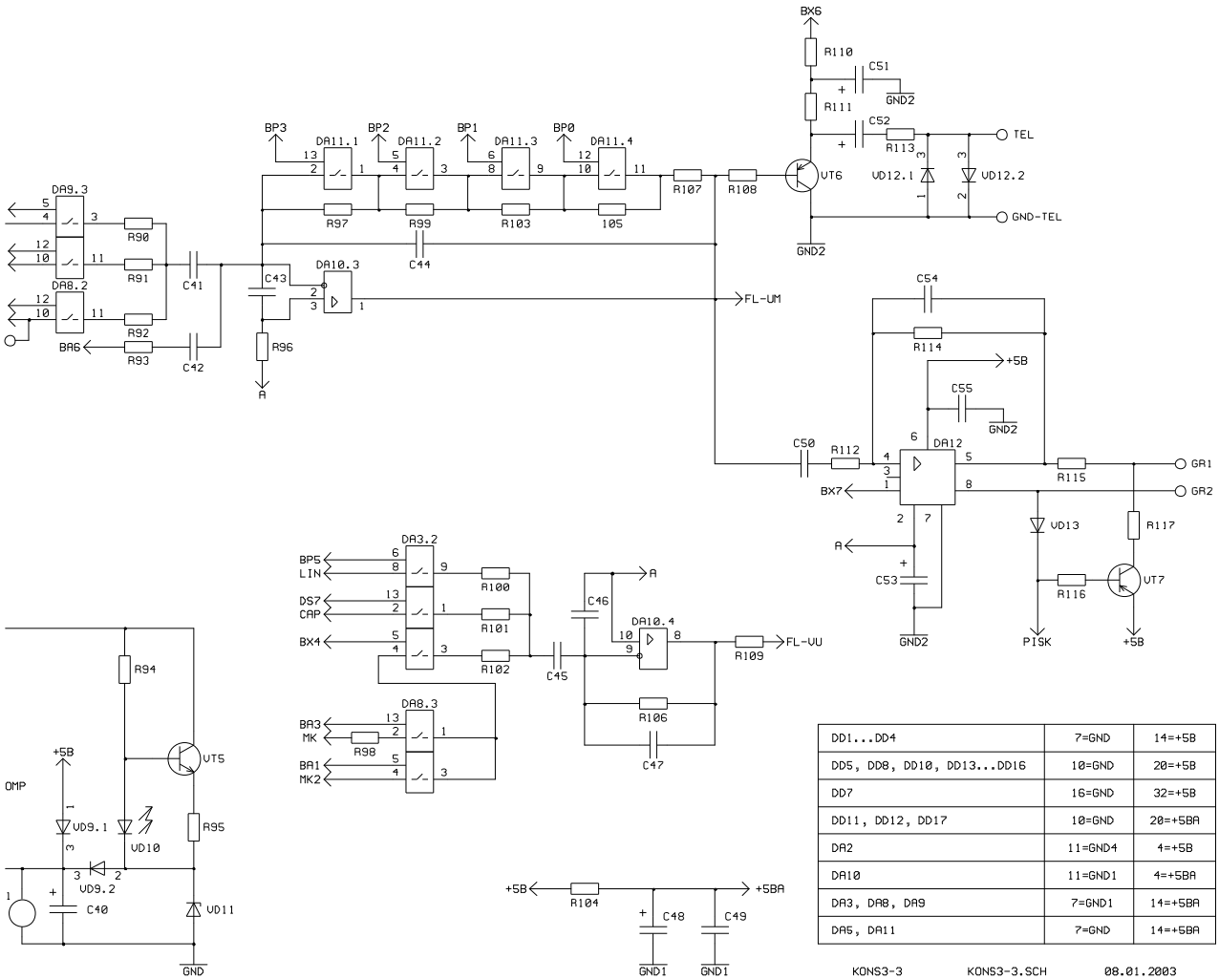

DD1...DD4	7=GND	14=+5B
DD5, DD8, DD10, DD13...DD16	10=GND	20=+5B
DD7	16=GND	32=+5B
DD11, DD12, DD17	10=GND	20=+5BA
DA2	11=GND4	4=+5B
DA10	11=GND1	4=+5BA
DA3, DA8, DA9	7=GND1	14=+5BA
DA5, DA11	7=GND	14=+5BA

KONS3-3 KONS3-3.SCH 08.01.2003